CANDELA LIGHTING

PROJECT

DATE

COMMENTS

IN STOCK

CPR-QS CANOPY ROUND LED QUICK SHIP

CPR-QS is a high efficiency DLC Premium round LED canopy luminaire with an anti-corrosion rust-proof heavy die-cast aluminum housing, high quality oval polycarbonate prismatic lens, and a white powder coat finish. Includes field selectable wattage and a universal voltage driver. CPR-QS can be ceiling mounted or pendant mounted with 3/4" conduit entry at the side or top of the housing (pendant by others). CPR-QS is ideal for indoor or underground parking garages and can replace 60-200W MH/HPS fixtures.



PHYSICAL

Material	Heavy Die-Cast Aluminum Alloy
Lens Material	Polycarbonate
Mounting	Ceiling Mount or Pendant Mount (3/4" Thread Conduit Entry on Top or Side, Pendant by Others)
Finish	White Powder Coat
Source	Lumileds LEDs

PERFORMANCE

Warranty	5 years
Certifications	cETLus, DLC Premium, FCC
LED Lifetime	L70 > 50,000 hours
Operating Temperature	-20°C to 45°C (-4°F to 113°F)
CCT	5000K
CRI	72+
Beam Angle	150°

ENERGY CHART

INPUT CURRENT		DELIVERED LUMENS	WATTAGE	EFFICACY lm/w
120V	277V			
0.25	0.1	4200	30	140
0.33	0.14	5600	40	140
0.5	0.21	8400	60	140

ELECTRICAL

Wattage	30W, 40W, 60W
Voltage	120-277V
Power Factor	0.9

ORDERING LOGIC

EX: CPR-QS-FS

FAMILY	OUTPUT	OPTIONS
CPR-QS	FS	
	FS Field Selectable 30W / 40W / 60W	MS Motion Sensor
		EM 18W Emergency Backup

ACCESSORIES ORDERING LOGIC (ORDER SEPARATELY)

EX: EM18

EMERGENCY	
EM18	18W Exterior Junction Box Emergency Battery, Li-Ion Battery, 90 Min. Discharge Time, 100-347V, 50/60Hz

MORE INFORMATION ON PAGE 5

DIMENSIONS

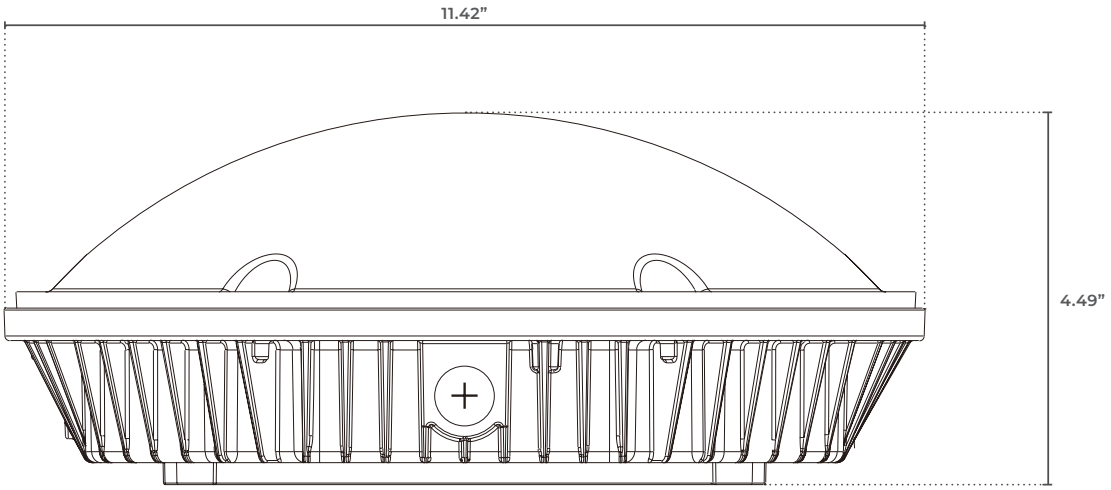

OPTIONS

MOTION SENSOR



18W EMERGENCY DRIVER



INSTALLATION METHODS

SURFACE MOUNTED WITH J-BOX

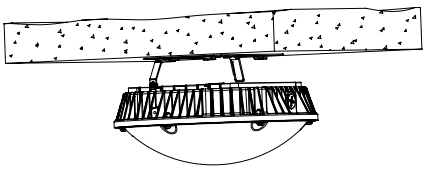

PENDANT MOUNTED WITH 3/4 CONDUIT ENTRY

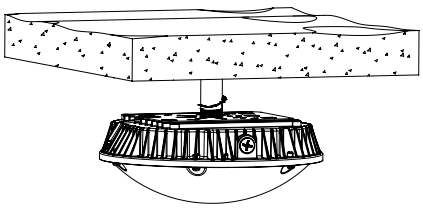

CEILING MOUNTED WITH SIDE WIRING

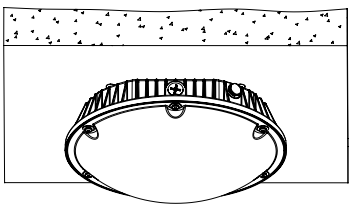

CANDELA LIGHTING

CPR-QS CANOPY ROUND LED QUICK SHIP

PHOTOMETRICS - 30W - 5000K

AVERAGE BEAM ANGLE (50%): 154.3°

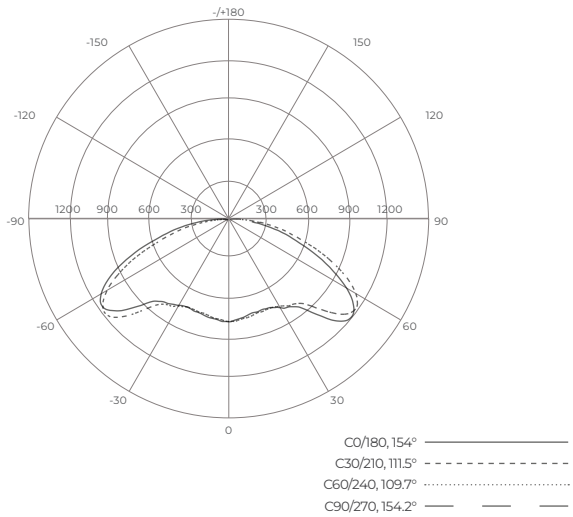

PHOTOMETRICS - 40W - 5000K

AVERAGE BEAM ANGLE (50%): 154.3°

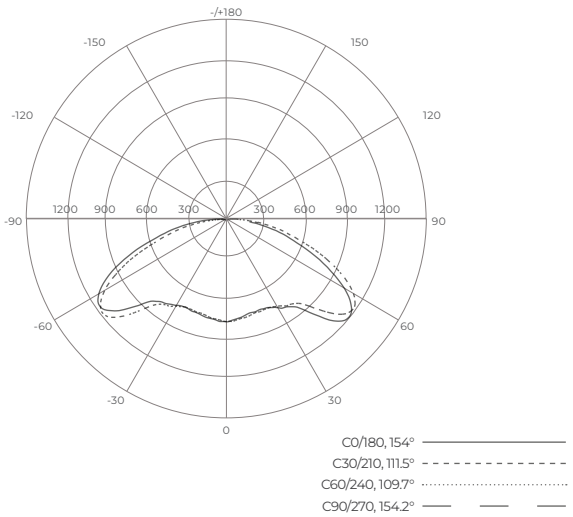

PHOTOMETRICS - 60W - 5000K

AVERAGE BEAM ANGLE (50%): 154.3°

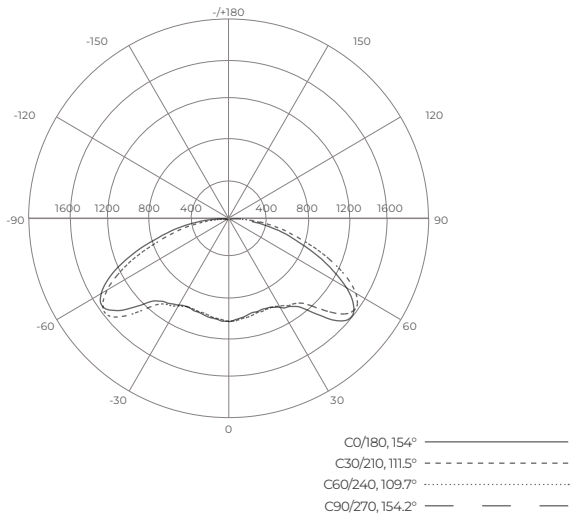

ADDITIONAL IMAGERY





MOTION SENSOR SETTINGS

By selecting the combination on the DIP switches, sensor data can be precisely set for each specific application.

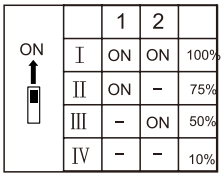

	1	2	
Ⅰ	ON	ON	100%
Ⅱ	ON	–	75%
Ⅲ	–	ON	50%
Ⅳ	–	–	10%

DETECTION AREA

Detection area can be reduced by selecting the combination on the DIP switches to fit precisely each application .

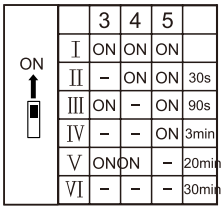

	3	4	5	
Ⅰ	ON	ON	ON	
Ⅱ	–	ON	ON	30s
Ⅲ	ON	–	ON	90s
Ⅳ	–	–	ON	3min
Ⅴ	ON	ON	–	20min
Ⅵ	–	–	–	30min

HOLD TIME

Refers to the time period the lamp remains at 100% illumination after no motion detected.

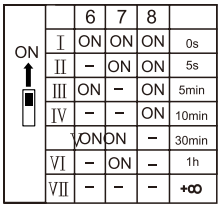

	6	7	8	
Ⅰ	ON	ON	ON	0s
Ⅱ	–	ON	ON	5s
Ⅲ	ON	–	ON	5min
Ⅳ	–	–	ON	10min
Ⅴ	ON	ON	–	30min
Ⅵ	–	ON	–	1h
Ⅶ	–	–	–	+∞

STAND-BY PERIOD

Refers to the time period the lamp remains at a low light level before it completely switches off in the long absence of people.
When set to"+∞"mode, the low light is maintained until motion is detected.

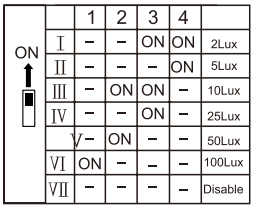

	1	2	3	4	
Ⅰ	–	–	ON	ON	2Lux
Ⅱ	–	–	–	ON	5Lux
Ⅲ	–	ON	ON	–	10Lux
Ⅳ	–	–	ON	–	25Lux
Ⅴ	–	ON	–	–	50Lux
Ⅵ	ON	–	–	–	100Lux
Ⅶ	–	–	–	–	Disable

DAYLIGHT SENSOR

The sensor can be set to only allow the lamp to illuminate below a defined ambient brightness threshold.
When set to Disable mode, the daylight sensor will switch on the lamp when motion is detected regardless of ambient light level.
50lux, 30lux: twilight operation, 10lux, 5lux: darkness operation only.
Note that daylight sensor is active only when lamp totally switches off.

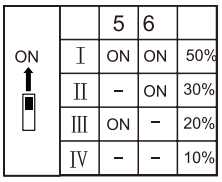

	5	6	
Ⅰ	ON	ON	50%
Ⅱ	–	ON	30%
Ⅲ	ON	–	20%
Ⅳ	–	–	10%

STAND-BY DIMMING LEVEL

The low light level you would like to have after the hold time in the long absence of people.

SPECIFICATIONS AND DETAILS ARE SUBJECT TO CHANGE WITHOUT NOTIFICATION. CONTACT SAGE BRANDS FOR UP TO DATE DETAILS.
CANDELA LIGHTING - A DIVISION OF SAGE BRANDS · **CANDELA.LIGHTING** | SAGE BRANDS · **SAGE.LIGHTING**

CANDELA LIGHTING

CPR-QS CANOPY ROUND LED QUICK SHIP

EMERGENCY SPECIFICATION

EM18 18W Exterior Junction Box Emergency Battery, Li-Ion Battery, 90 Min. Discharge Time, 100-347V, 50/60Hz



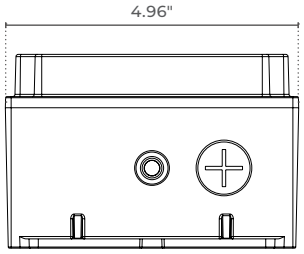

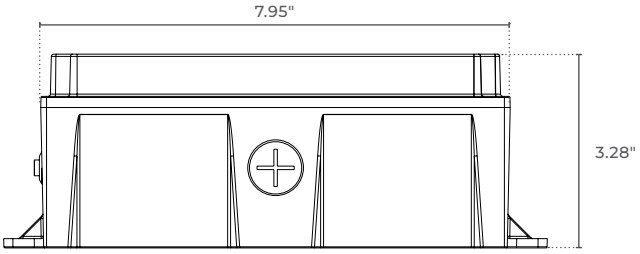

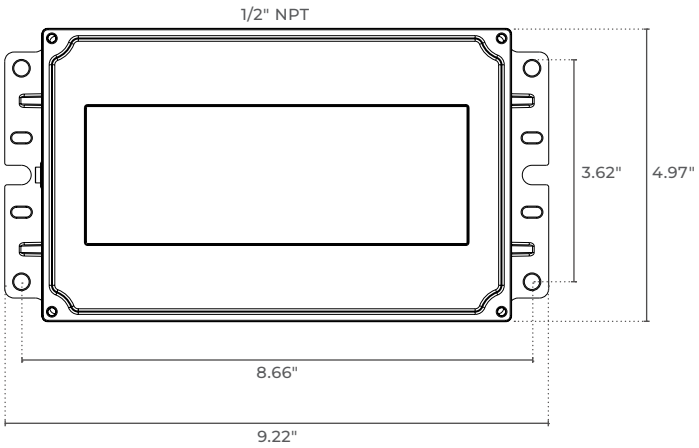

FEATURES

- Integral junction box with 1/2" NPT conduit entries
- For exterior LED luminaires, including canopy and wall pack fixtures
- cULus Listed to UL 924 and CSA C22.2 No. 141
- CEC Title 20 compliant
- Universal input, 120 to 347VAC, 50/60Hz
- 18W constant output power for 90 minutes
- Automatic self-testing: monthly 30-second and annual 90-minute tests
- Charge indicator and test switch
- Battery over-temperature protection
- 0-10V dimming interface and 12VDC auxiliary output for sensors
- Wiring options for wall switch, dimmer, and occupancy sensor
- Connects to the luminaire's LED driver input

SPECIFICATIONS

Input Voltage	120 to 347 VAC, 50/60Hz
Input Current	200mA max.
Charging Power	12W max.
Emergency Power	18W
Emergency Output Voltage	170VDC
Emergency Duration	90 minutes minimum
Recharge Time	24 hours
Auxiliary Output	12VDC, 0.17A
Ambient Temperature	0°C to 50°C (32°F to 122°F)
Dimensions (L x W x H)	7.95" x 4.96" x 3.28" (202 x 126.2 x 83.5mm)
Mounting Hole Spacing	8.66" x 3.62" (220 x 92mm)
Conduit Entries	1/2" NPT
Battery	Sealed, maintenance-free
Package Quantity	10 per carton

NOTES

- Requires an unswitched AC source
- Not for use in hazardous locations or heated air outlets
- Voltage on the 0-10V dimming leads must be below 20VDC
- Fixture above 18W require a 0-10V dimming driver

SPECIFICATIONS AND DETAILS ARE SUBJECT TO CHANGE WITHOUT NOTIFICATION. CONTACT SAGE BRANDS FOR UP TO DATE DETAILS.
CANDELA LIGHTING - A DIVISION OF SAGE BRANDS · **CANDELA.LIGHTING** | SAGE BRANDS · **SAGE.LIGHTING**